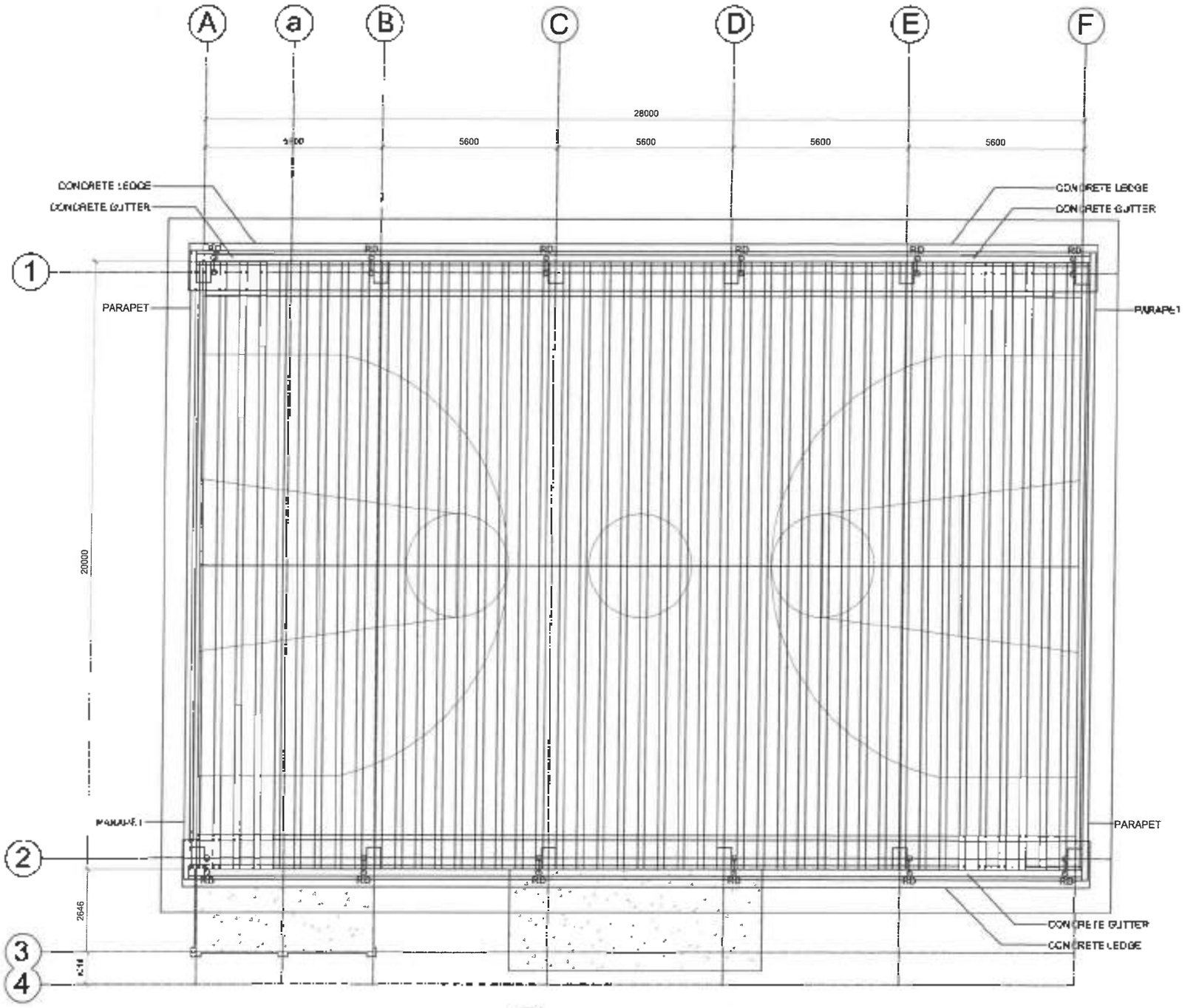

1 P-6 ROOF DRAINAGE LAYOUT PLAN
SCALE 1:100MTS

MANHOLE COVER

LEGEND:

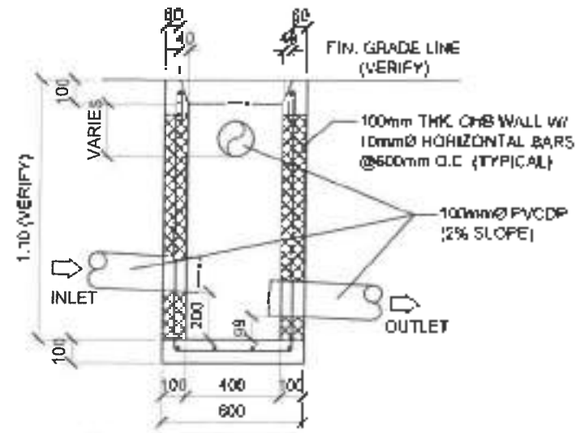

3 P-6 SECTION OF CATCH BASIN
SCALE: 1:50MTS

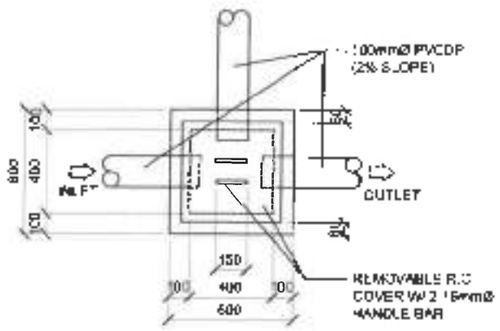

2 P-6 DETAIL PLAN OF CATCH BASIN
SCALE: 1:50MTS

	PROJECT NAME & LOCATION	SHEET CONTENTS:	PREPARED:	REVIEWED:	SUBMITTED:	RECOMMENDED:	APPROVED:	SHEET No.	SHEET No.
Republic of the Philippines DEPARTMENT OF PUBLIC WORKS AND HIGHWAYS REGIONAL OFFICE No. VIII NORTHERN SAMAR FIRST DISTRICT ENGINEERING OFFICE Catarman, Northern Samar	CONSTRUCTION OF MULTI-PURPOSE FACILITY, (COVERED COURT) BARANGAY SAN JOSE, LAVEZARES, NORTHERN SAMAR Lavezares, Northern Samar	ROOF DRAINAGE LAYOUT PLAN CATCH BASIN DETAIL PLAN	ENGR. [illegible] ESUARDO Date	MAR DONALD H. EBUAN ASST. CHIEF, PLANNING & DESIGN SECTION Date	ANDY S. PRIETO CHIEF, PLANNING & DESIGN SECTION Date	VIVIAN [illegible] LACO ASST. DIST. ENGINEER Date	ALVIN A. IGNACIO DISTRICT ENGINEER Date	S-6	31 32

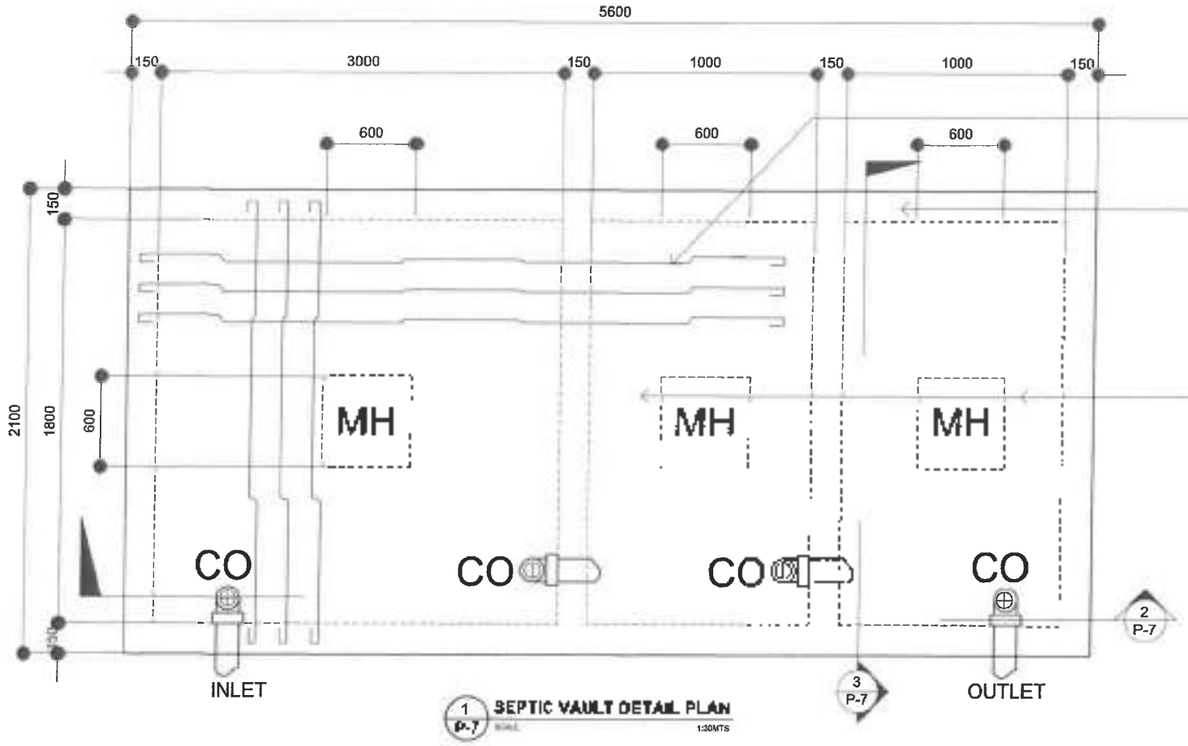

1 P-7 SEPTIC VAULT DETAIL PLAN
1:30MTS

2-10mmØ EXTRA BARS TOP/BOTTOM ON TWO PARALLEL SIDE

S2 150mm THK + FIN. SLAB w/ 10mm REBARS @300mm OC BENT UP 2/3 OUT @L/4 FROM FACE SUPPORT BOTHWAYS

S-1a 150mm THK + FIN. SLAB w/ 10mm REBARS @300mm OC BENT UP 2 OUT OF 3 @L/4 FROM FACE SUPPORT BOTHWAYS

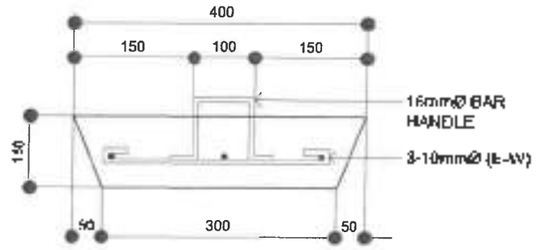

4 P-7 MANHOLE COVER
SCALE:

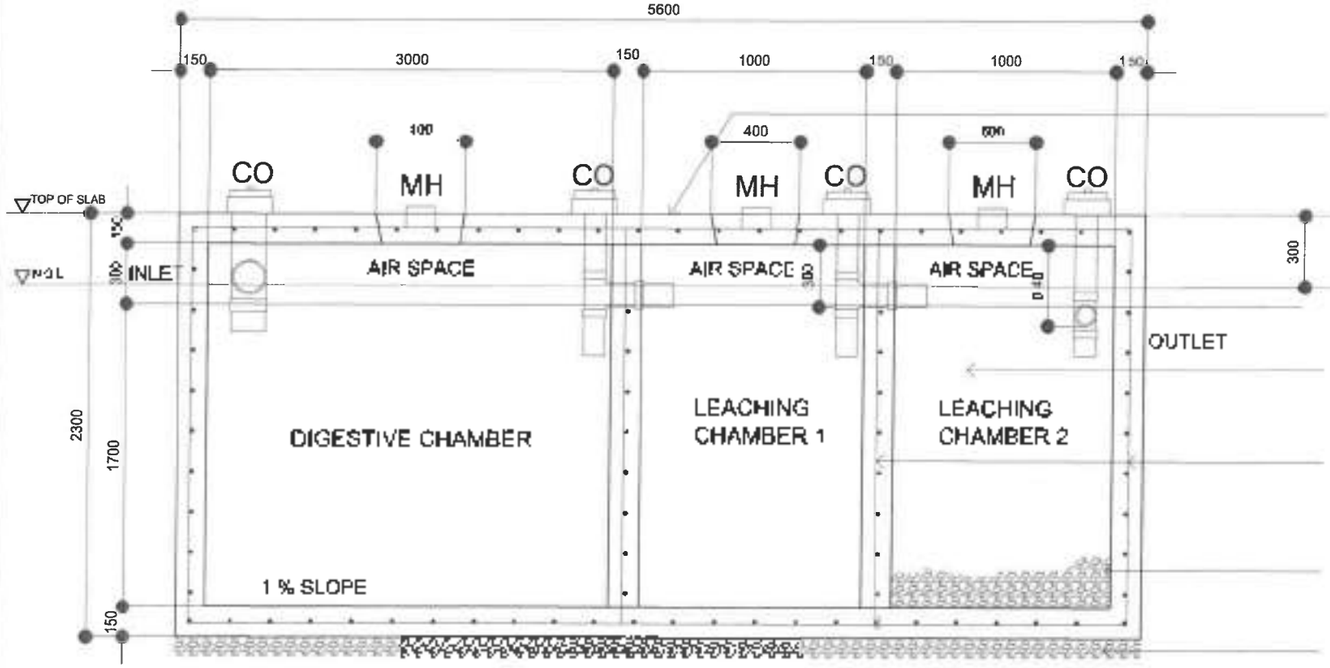

2 P-7 SEPTIC VAULT SECTION
1:30MTS

150mm THK FIN. FIN. SLAB w/ 10mmØ REBARS @ 300mm OC BENT UP 2 OUT OF 3 AT L/4 FROM FACE SUPPORT BOTHWAYS

TOP OF SLAB

N.G.L.

PLASTERED w/ WATERPROOFING COMPOUND OR APPLY ONE FACE BITUMEN TAR

WALL REINFORCEMENT 10mmØ VERT. OR HOR. BAR @ 200mm OC B/W

CONCRETE WALL w/ HOT APPLIED ASPHALT WATERPROOFING (INSIDE FACE)

100mm THK GRAVEL BEDDING

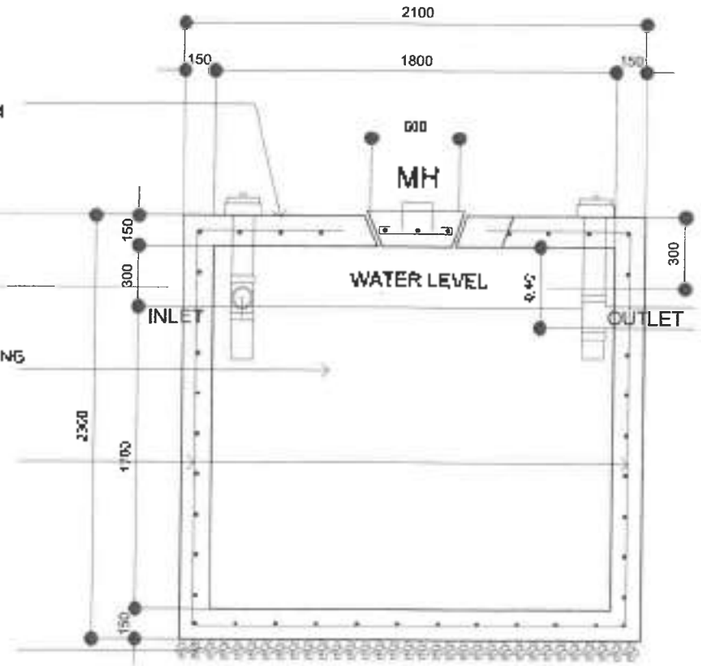

3 P-7 SEPTIC VAULT SECTION
SCALE:

Republic of the Philippines DEPARTMENT OF PUBLIC WORKS AND HIGHWAYS REGIONAL OFFICE No. VIII NORTHERN SAMAR FIRST DISTRICT ENGINEERING OFFICE Catarman, Northern Samar	PROJECT NAME & LOCATION CONSTRUCTION OF MULTIPURPOSE FACILITY (COVERED COURT) BARANGAY SAN JOSE, LAVEZARES, NORTHERN SAMAR Lavezares, Northern Samar	SHEET CONTENTS: DETAIL OF SEPTIC VAULT SECTION OF SEPTIC VAULT MANHOLE COVER	PREPARED: BURT CHRIST DUCENARIO Date	REVIEWED: MAN MADALO R. ERMAN Date	SUBMITTED: ANDY B. ERENO Date	RECOMMENDED: ALVIN A. IGNACIO Date	APPROVED: ALVIN A. IGNACIO Date	SET No. P-7
								SHEET No. 32 / 42

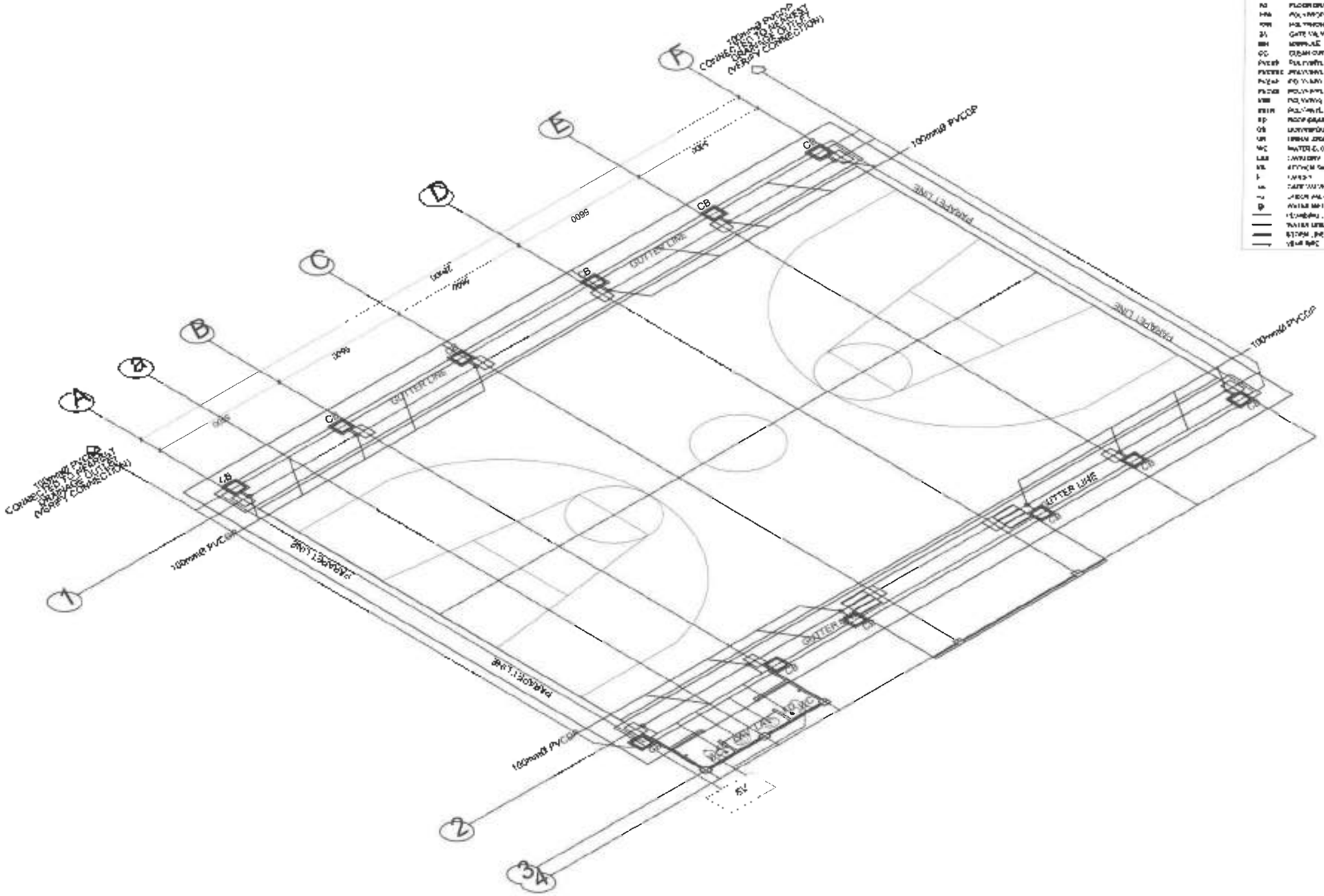

PLUMBING LINE ISOMETRIC LAYOUT PLAN

P-8 SCALE: 1:100MTS

Republic of the Philippines DEPARTMENT OF PUBLIC WORKS AND HIGHWAYS REGIONAL OFFICE No. VIII NORTHERN SAMAR FIRST DISTRICT ENGINEERING OFFICE Catarman, Northern Samar	PROJECT NAME & LOCATION	SHEET CONTENTS:	PREPARED:	REVIEWED:	SUBMITTED:	RECOMMENDED:	APPROVED:	SS No.	SHEET No.
	CONSTRUCTION OF MULTI-PURPOSE FACILITY, (COVERED COURT) BARANGAY SAN JOSE, LAVEZARES, NORTHERN SAMAR	ISOMETRIC PLUMBING LAYOUT	ALERT DANIEL LEONARDO ARCHITECT	NOR DONALD H. BINAN ASST. DIST. ENGINEER & DESIGN SECTION Chief	ANDY S. ERERO CHIEF, PLANNING & DESIGN SECTION Date	VIVIAN B. BULACO DISTRICT ENGINEER Date	ALVIN A. IGNACIO DISTRICT ENGINEER Date	P-8	33 / 42

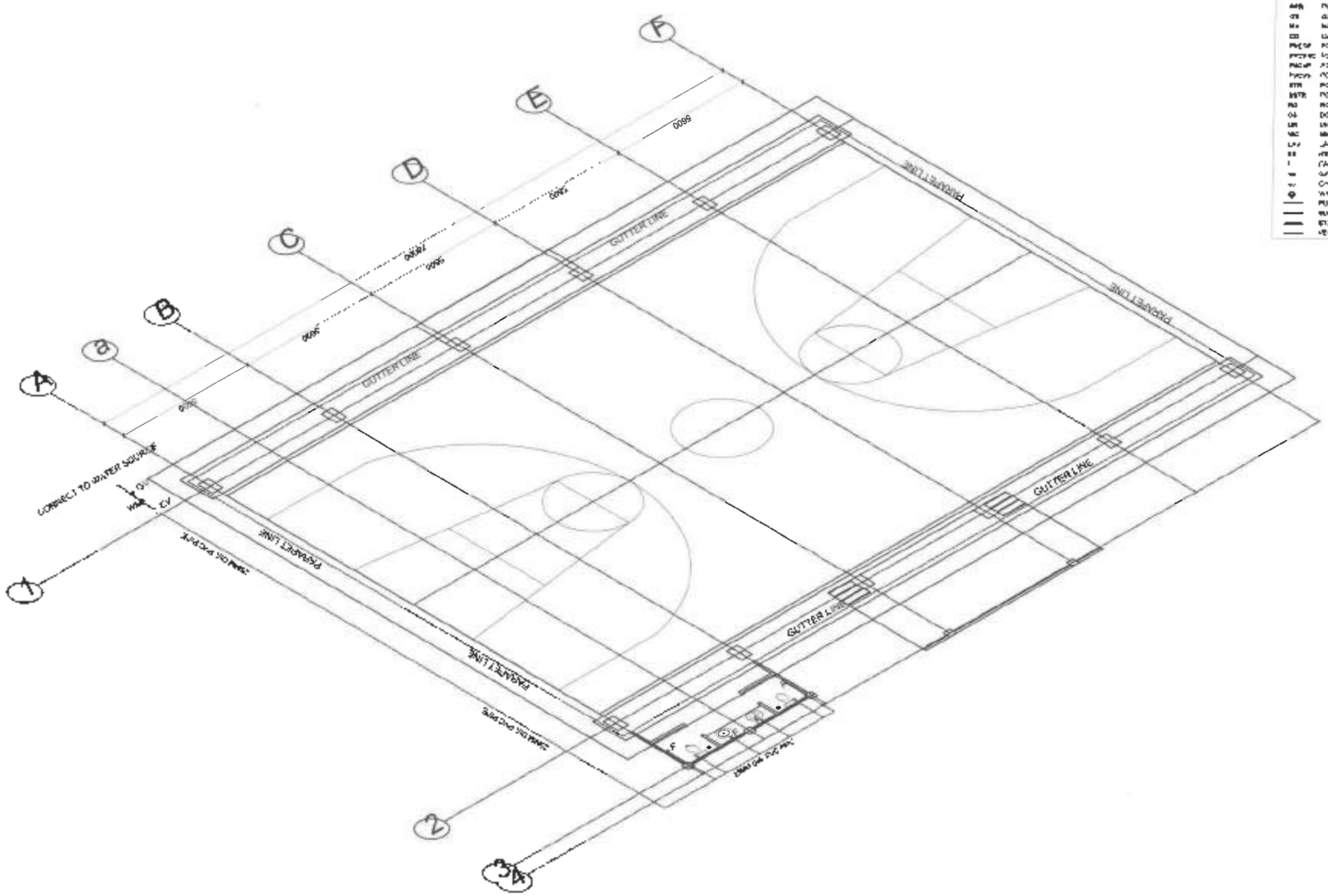

1 / P-5 WATER LINE ISOMETRIC LAYOUT PLAN

SCALE: 1:100MTS

Republic of the Philippines DEPARTMENT OF PUBLIC WORKS AND HIGHWAYS Regional Office No. VIII NORTHERN SAMAR FIRST DISTRICT ENGINEERING OFFICE Catarman, Northern Samar	PROJECT NAME & LOCATION	SHEET CONTENTS:	PREPARED:	REVIEWED:	SUBMITTED:	RECOMMENDED:	APPROVED:	SET No.	SHEET No.
	CONSTRUCTION OF MULTIPURPOSE FACILITY (COVERED COURT) BARANGAY SAN JOSE, LAVEZARES, NORTHERN SAMAR Lavezares, Northern Samar	ISOMETRIC WATER LINE LAYOUT	SURT BRADLEY P. LUCHARDO ARCHITECT II Date	MR. DONALD R. BAUAN Chief Planning & Design Section Date	ANDY G. SEGERO Chief Planning & Supervision Section Date	VIVIA M. BRACO Asst. District Engineer Date	ALVIN A. ISNAGIO District Engineer Date	P-5	34 / 42

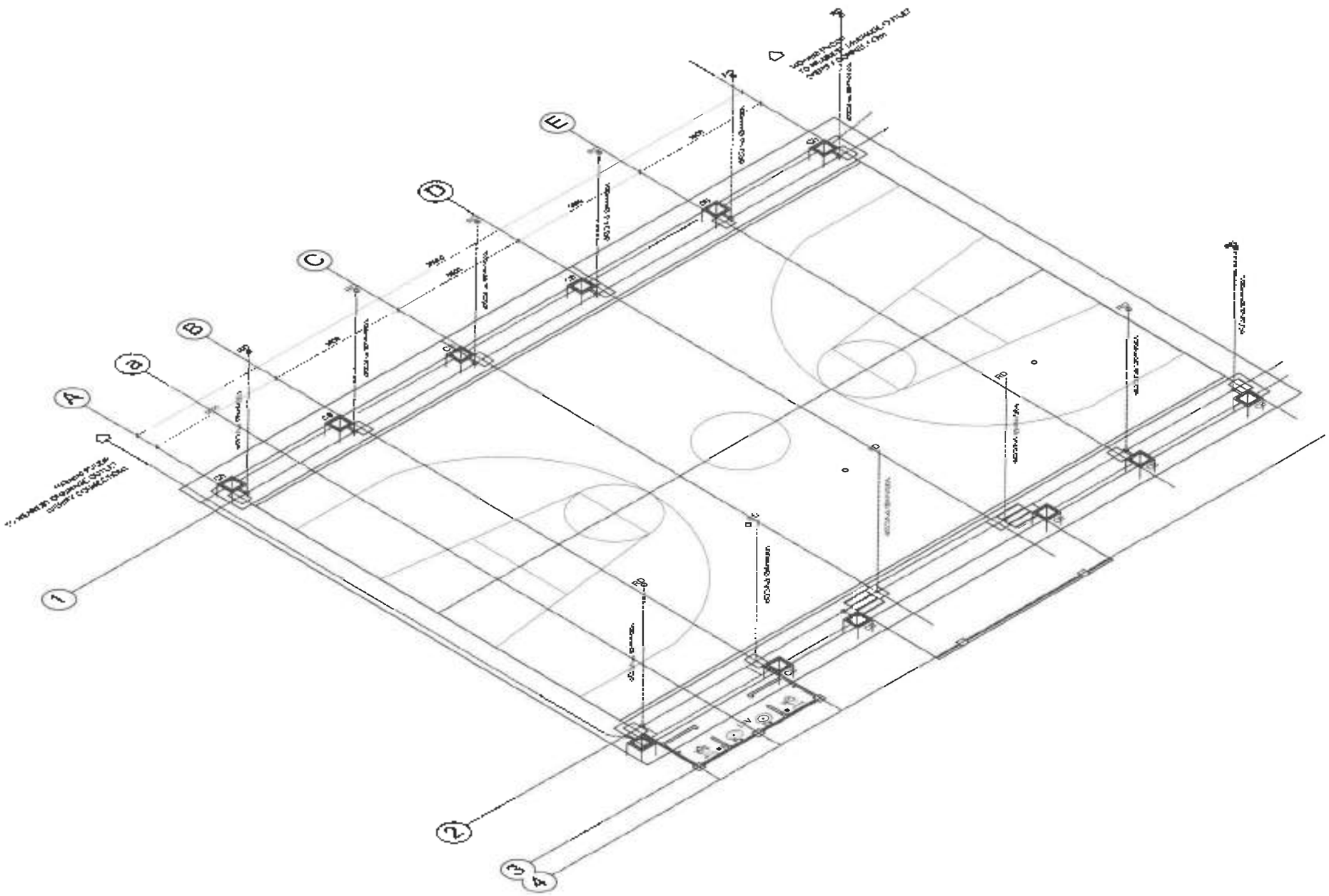

LEGEND:

CB	CATCH BASIN
CV	CHECK VALVE
HB	HOSE BIBB
PD	POTABLE DRINKING
PPR	POLYPROPYLENE RANDOM COPOLYMER WATER
PPR	PVC PRESSURE PIPE CLASS 200 WATER
GV	GATE VALVE
M	MANHOLE
CO	CLEAN OUT
PVCSP	POLYVINYL CHLORIDE SOIL PIPE
PVCWP	POLYVINYL CHLORIDE WATER AGGREGATE
PVCDP	POLYVINYL CHLORIDE DRAIN PIPE
PVCSD	PVC VARIOUS DIA DRAIN VENT STACK
PTR	POLYVINYL CHLORIDE DRAIN VENT TRUNKWAY
PVTP	PVC VARIOUS DIA DRAIN VENT STACK TWO HOOK
FD	FLOOR DRAIN
CO	CLEANOUT
LB	LAVATORY
WC	WATER CLOSET
LAV	LAVATORY
KS	KITCHEN SINK
T	FAUCET
GV	GATE VALVE
CV	CHECK VALVE
	WATER METER
	FIRE HYDRANT LINE
	WATER LINE
	DRAIN LINE
	VENT PIPE

STORM DRAINAGE LINE ISOMETRIC LAYOUT PLAN

1 / P-10 SCALE: 1:100MTS

	PROJECT NAME & LOCATION:	SHEET CONTENTS:	PREPARED:	REVIEWED:	SUBMITTED:	RECOMMENDED:	APPROVED:	SET No.	SHEET No.
Republic of the Philippines DEPARTMENT OF PUBLIC WORKS AND HIGHWAYS REGIONAL OFFICE No. VIII NORTHERN SAMAR FIRST DISTRICT ENGINEERING OFFICE Catarman, Northern Samar	CONSTRUCTION OF MULTI-PURPOSE FACILITY, (COVERED COURT) BARANGAY San JOSE, LAVEZARES, NORTHERN SAMAR Lavezares, Northern Samar	ISOMETRIC STORMLINE LAYOUT	AUREA [illegible] LUCUARIO ARCHITECT II Date:	MAR DONALD R. SIMAN ASST. CHIEF, PLANNING & DESIGN SECTION Date:	ANDY S. [illegible]RO CHIEF, PLANNING & DESIGN SECTION Date:	VIVIAN [illegible]ACO [illegible] ENGINEER Date:	ALVIN A. IBNACIO DISTRICT ENGINEER Date:	P-10	36 / 42

SCHEDULE OF LOADS

CKT NO.	LOAD DESCRIPTION	QTY	W/ LOAD	VOLT	AMPERE	CIRCUIT BREAKER POLE	AT	AF	AMC	WIRE AND CONDUIT SIZE
1	[illegible]	[illegible]	[illegible]	[illegible]	[illegible]	[illegible]	[illegible]	[illegible]	[illegible]	[illegible]
2	[illegible]	[illegible]	[illegible]	[illegible]	[illegible]	[illegible]	[illegible]	[illegible]	[illegible]	[illegible]
3	[illegible]	[illegible]	[illegible]	[illegible]	[illegible]	[illegible]	[illegible]	[illegible]	[illegible]	
4	SPACE									
	TOTAL		[illegible]		[illegible]	[illegible]				

[illegible]

[illegible]

[illegible]

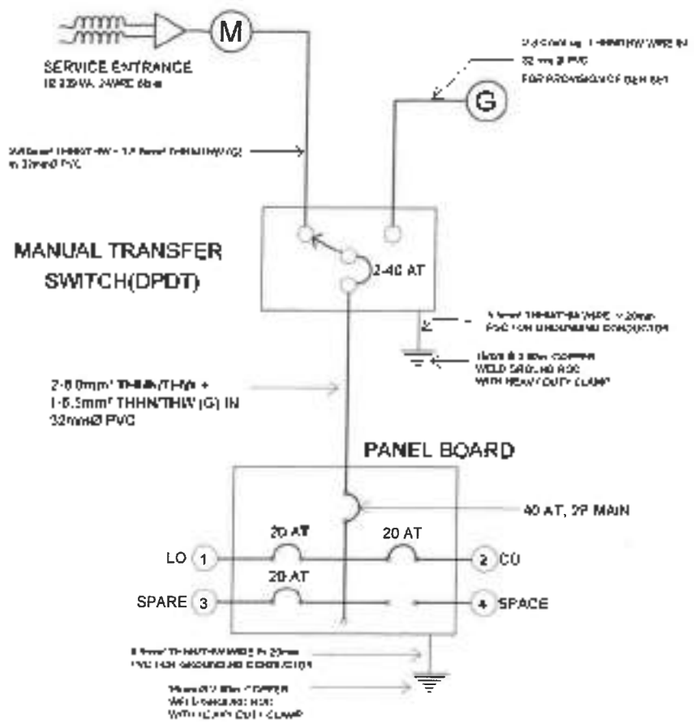

SINGLE LINE DIAGRAM

NOT TO SCALE

GENERAL NOTES

1. ALL ELECTRICAL WORKS SHALL COMPLY W THESE PLANS AND SPECIFICATIONS. THE APPLICABLE PROVISION OF THE LATEST EDITION OF THE PHILIPPINE ELECTRICAL CODE (PEC), THE RULES AND REGULATIONS OF THE LOCAL ENFORCING AUTHORITY AND THE REQUIREMENTS OF THE LOCAL POWER COMPANY
2. THE ELECTRICAL SERVICE POWER SHALL BE 1-PHASE, 2-WIRE, 230 AC, 60Hz
3. WIRING METHOD SHALL BE AS FOLLOWS
   RIGID STEEL CONDUIT OR POLYVINYL CHLORIDE CONDUIT SCHEDULE 40 SHALL BE USED AS SPECIFIED PLAN
4. ALL WIRES SHALL BE COPPER AND THERMOPLASTIC INSULATED TYPE "THHN" UNLESS OTHERWISE INDICATED IN THE PLAN. THE MINIMUM SIZE WIRE FOR POWER AND LIGHTING CIRCUIT HOMERUNS SHALL BE 3.5mm² AND INSULATED FOR 600VOLTS. LIKE WISE, ALL CONDUCTORS SHALL BE COLOR CODED. SMALLEST RACEWAYS SHALL BE 15mmØ (NOMINAL)
5. ALL OUTLET BOXES SHALL BE GALVANIZED GAGE NO 16 DEEP TYPE.
6. ALL MATERIALS TO BE USED SHALL BE BRAND NEW AND APPROVED FOR THE PARTICULAR LOCATION AND USAGE
7. EQUIPMENT GROUNDING SYSTEM SHALL BE PROVIDED TO THE ELECTRICAL SYSTEM AS PER PHILIPPINE ELECTRICAL CODE REQUIREMENT
8. MOUNTING HEIGHT OF WIRING DEVICES SHALL BE AS FOLLOWS:
   a. LIGHT SWITCH — 1400mm ABOVE FINISH FLOOR
   b. CONVENIENCE OUTLET — 400mm ABOVE FINISH FLOOR
   c. PANEL BOARD — 1800mm ABOVE FINISH FLOOR
9. ALL ELECTRICAL WORKS SHALL BE DONE UNDER THE DIRECT AND IMMEDIATE SUPERVISION OF A DULY REGISTERED ELECTRICAL ENGINEER.

LEGEND:

SYMBOL	DESCRIPTION
	SERVICE ENTRANCE
M	SERVICE METER
Sa	1-GANG SWITCH
2Sab	2-GANG SWITCH
	RACEWAY CONDUIT CONCEALED UNDER FLOOR
	RACEWAY CONDUIT IN CEILING
LP	LIGHTING AND POWER PANELBOARD
MTS	MANUAL TRANSFER SWITCH
	CKT. BREAKER, RATING AS INDICATED
1	15W LED LIGHT BULB in 4"x4" Dia. RECEPTACLE w/ E27 Base
	100W LED FLOOD LIGHT
	HOMERUN CIRCUIT DIRECT TO PANELBOARD
	DUPLEX CONVENIENCE OUTLET (WEATHER PROOF)
	JUNCTION BOX
G	GENERATOR SET

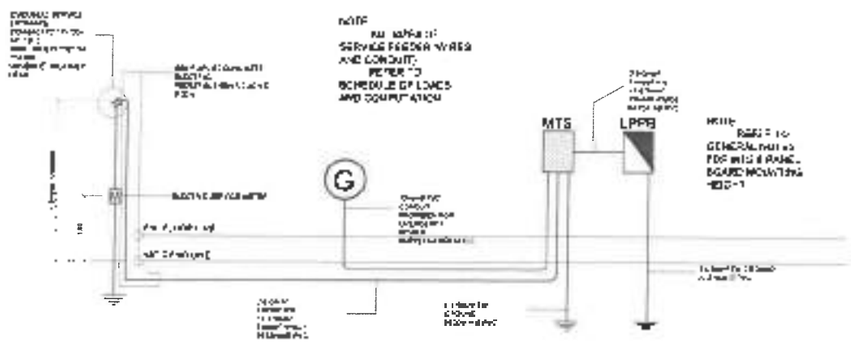

ELECTRICAL RISER DIAGRAM

NOT TO SCALE

Republic of the Philippines
DEPARTMENT OF PUBLIC WORKS AND HIGHWAYS
REGIONAL OFFICE No. VIII
NORTHERN SAMAR FIRST DISTRICT ENGINEERING OFFICE
Catarman, Northern Samar

PROJECT NAME & LOCATION: CONSTRUCTION OF MULTI-PURPOSE FACILITY, (COVERED COURT) BARANGAY SAN JOSE, LAVEZARES, NORTHERN SAMAR

SHEET CONTENTS: SCHEDULE OF LOADS, SINGLE LINE DIAGRAM, ELECTRICAL RISER DIAGRAM, GENERAL NOTES

PREPARED: [illegible] — Project Engineer, Designer

DESIGNED: [illegible] — Designer

REVIEWED: [illegible] — Asst. Chief, Planning & Design Section

[illegible]: ANDY S. [illegible] — Chief, Planning & Design Section

RECOMMENDED: [illegible] — Chief, Engineering Section

APPROVED: ALVIN A. IGNACIO — District Engineer

SET No. E-1

SHEET No. 39 / 42

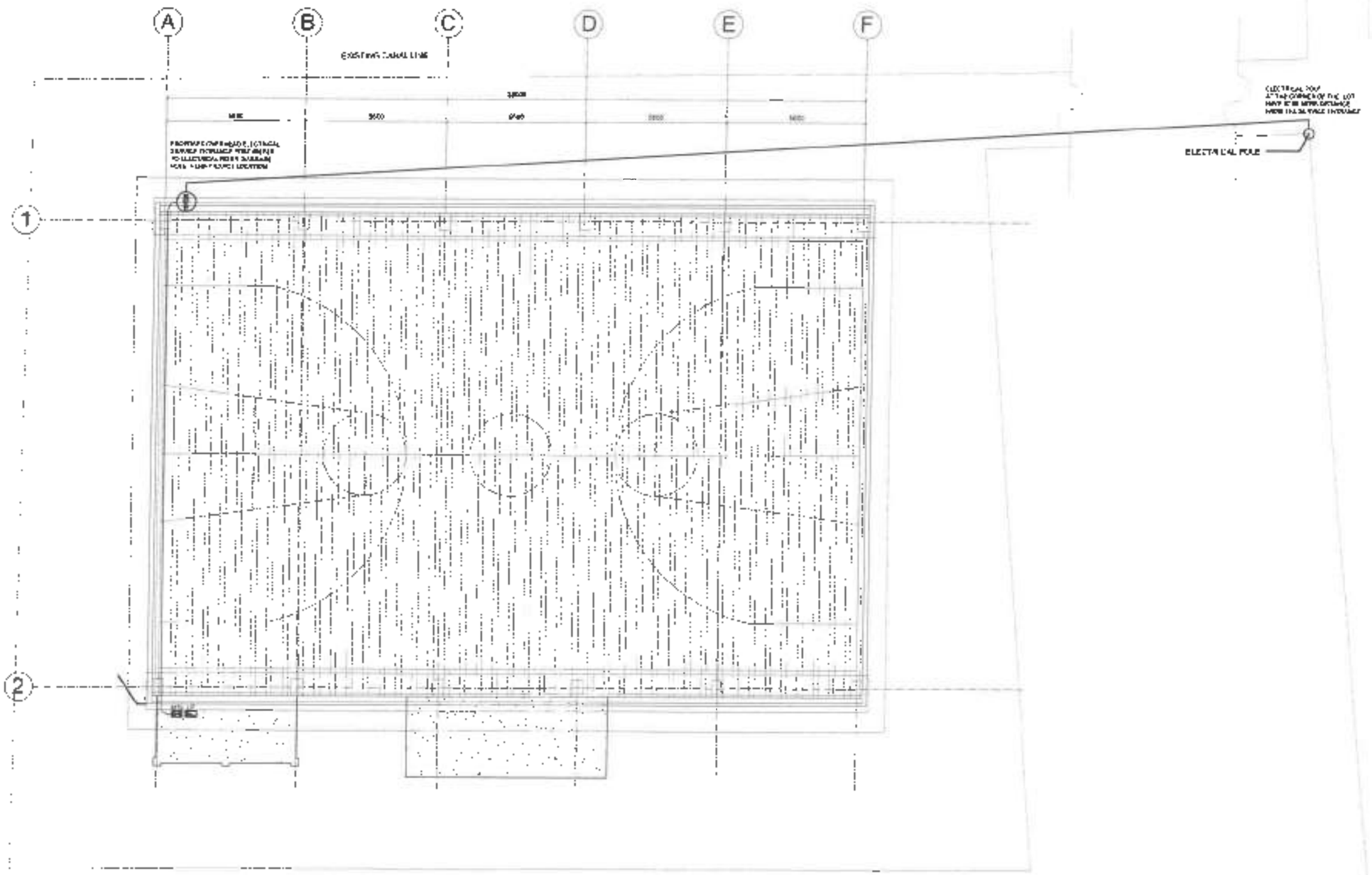

1 / E-1 **SITE DEVELOPMENT PLAN**

SCALE 1:100M

Republic of the Philippines
DEPARTMENT OF PUBLIC WORKS AND HIGHWAYS
REGIONAL OFFICE No. VIII
NORTHERN SAMAR FIRST DISTRICT ENGINEERING OFFICE
Catarman, Northern Samar

PROJECT NAME & LOCATION: CONSTRUCTION OF MULTI-PURPOSE FACILITY, (COVERED COURT) BARANGAY SAN JOSE LAVEZARES, NORTHERN SAMAR

SHEET CONTENTS: SITE DEVELOPMENT PLAN

PREPARED: ELVIRA E. CESARIO, Civil Engineer II

DESIGNED: MARY JOY L. CORRICO, Engineer I

REVIEWED: HON. DONALD V. SIMAN, Asst. Chief Planning & Design Section Chief

SUBMITTED: ANDY E. CERAO, Chief, Planning & Design Section

RECOMMENDED: VIVIAN C. DIACO, Asst. District Engineer

APPROVED: ALVIN A. IGNACIO, District Engineer

SHT No. E-2

SHEET No. 37 / 42

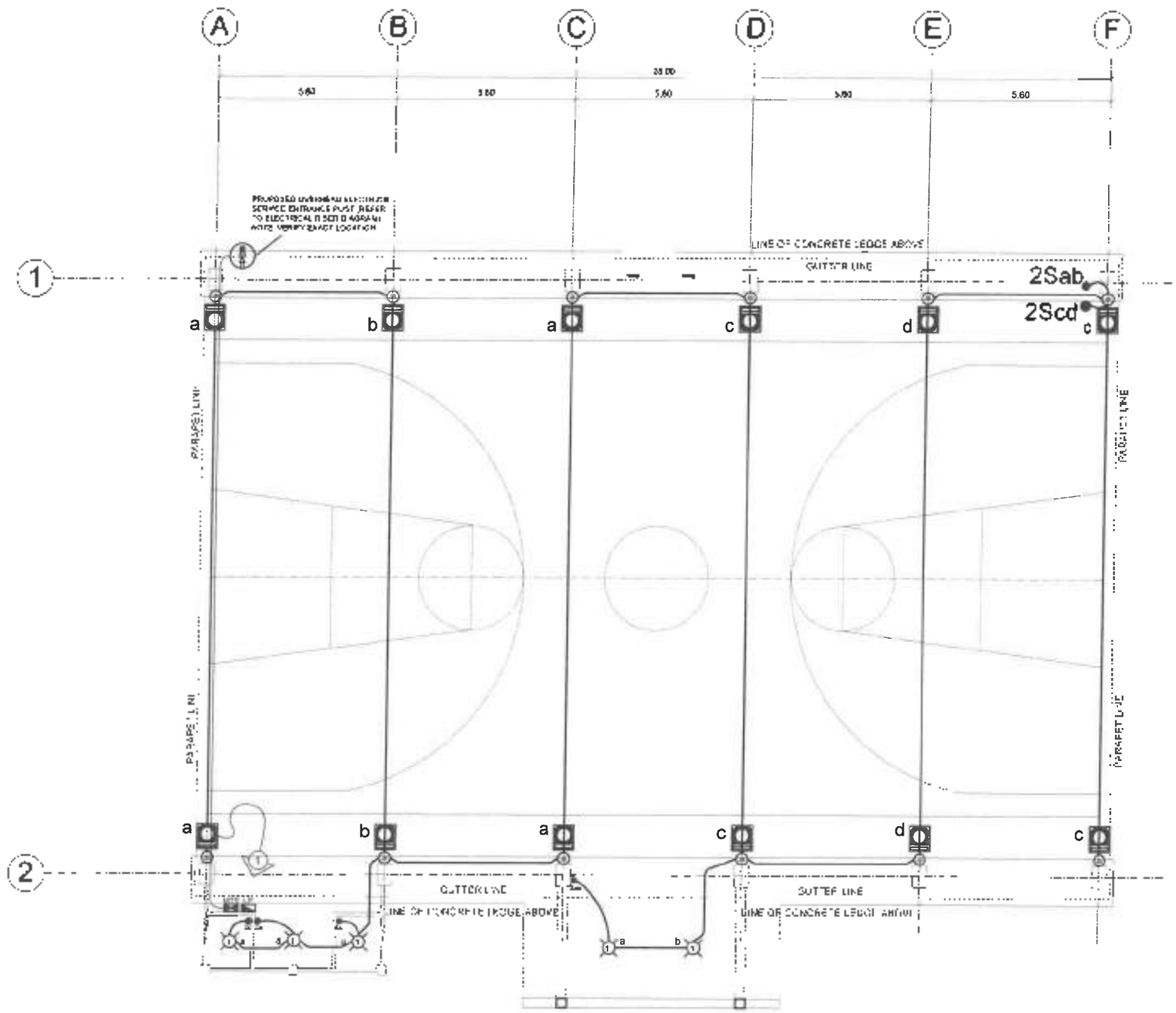

1
E-2

LIGHTING OUTLET LAYOUT PLAN

SCALE 1:100M

Republic of the Philippines DEPARTMENT OF PUBLIC WORKS AND HIGHWAYS REGIONAL OFFICE NO. VIII NORTHERN SAMAR FIRST DISTRICT ENGINEERING OFFICE Catarman, Northern Samar	PROJECT NAME & LOCATION CONSTRUCTION OF MULTI-PURPOSE FACILITY, (COVERED COURT) BARANGAY SAN JOSE, LAVEZARES, NORTHERN SAMAR Lavezares, Northern Samar	SHEET CONTENTS: LIGHTING LAYOUT PLAN	PREPARED ELMER C. OCAMPO Electrical Engineer A DESIGNED MARK JOY L. CORNEJO Engineer I	REVIEWED: MR. DONALD R. TIMAN Head, Chief, Plumbing & Electrical Section	SUBMITTED ANDY S. [illegible] Chief, Planning & Design Section	RECOMMENDED [illegible] ENGINEER	APPROVED ALVIN A. IGNACIO District Engineer	SET No. F-3	SHEET No. 36 42

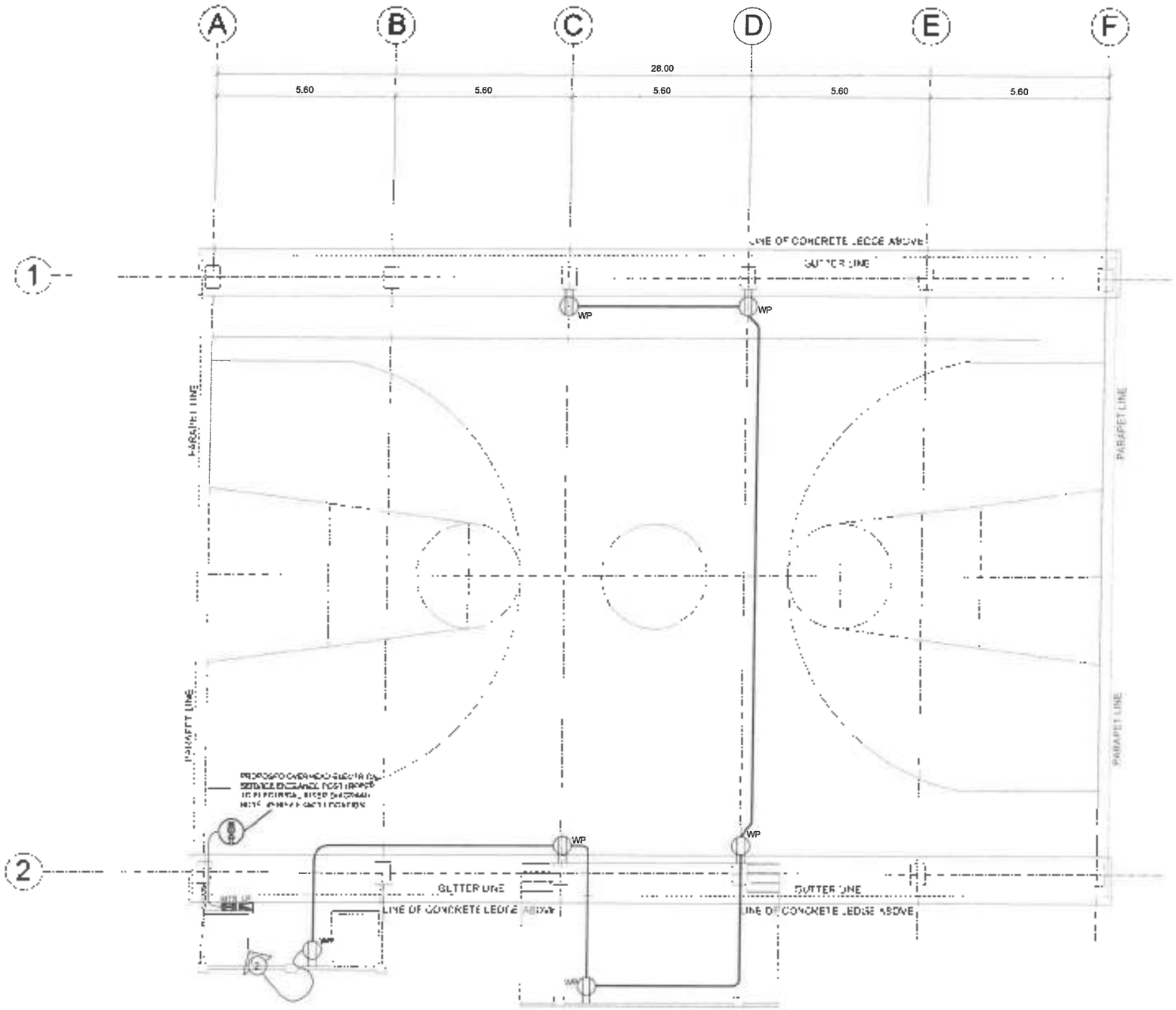

1
E-3

CONVENIENCE OUTLET LAYOUT PLAN

SCALE 1:110M

Republic of the Philippines DEPARTMENT OF PUBLIC WORKS AND HIGHWAYS REGIONAL OFFICE No. VIII NORTHERN SAMAR FIRST DISTRICT ENGINEERING OFFICE Catarman, Northern Samar	PROJECT NAME & LOCATION CONSTRUCTION OF MULTI-PURPOSE FACILITY, (COVERED COURT) BARANGAY SAN JOSE, LAVEZARES, NORTHERN SAMAR Lavezares, Northern Samar	SHEET CONTENTS: CONVENIENCE OUTLET LAYOUT PLAN	PREPARED: ELVIN A. IGNACIO Junior Engineer	REVIEWED ROR DONALD R. ERMA ARE Chief, Planning & Design Section	SUBMITTED ANDY B. ERERO Chief, Planning & Design Section	RECOMMENDED IVAN L. BACO ARE Division Chief	APPROVED ALVIN A. IGNACIO Engineer	SET No E-1	SHEET No 39 42
			DESIGNED: MARY JOY L. DOMINGO Engineer						

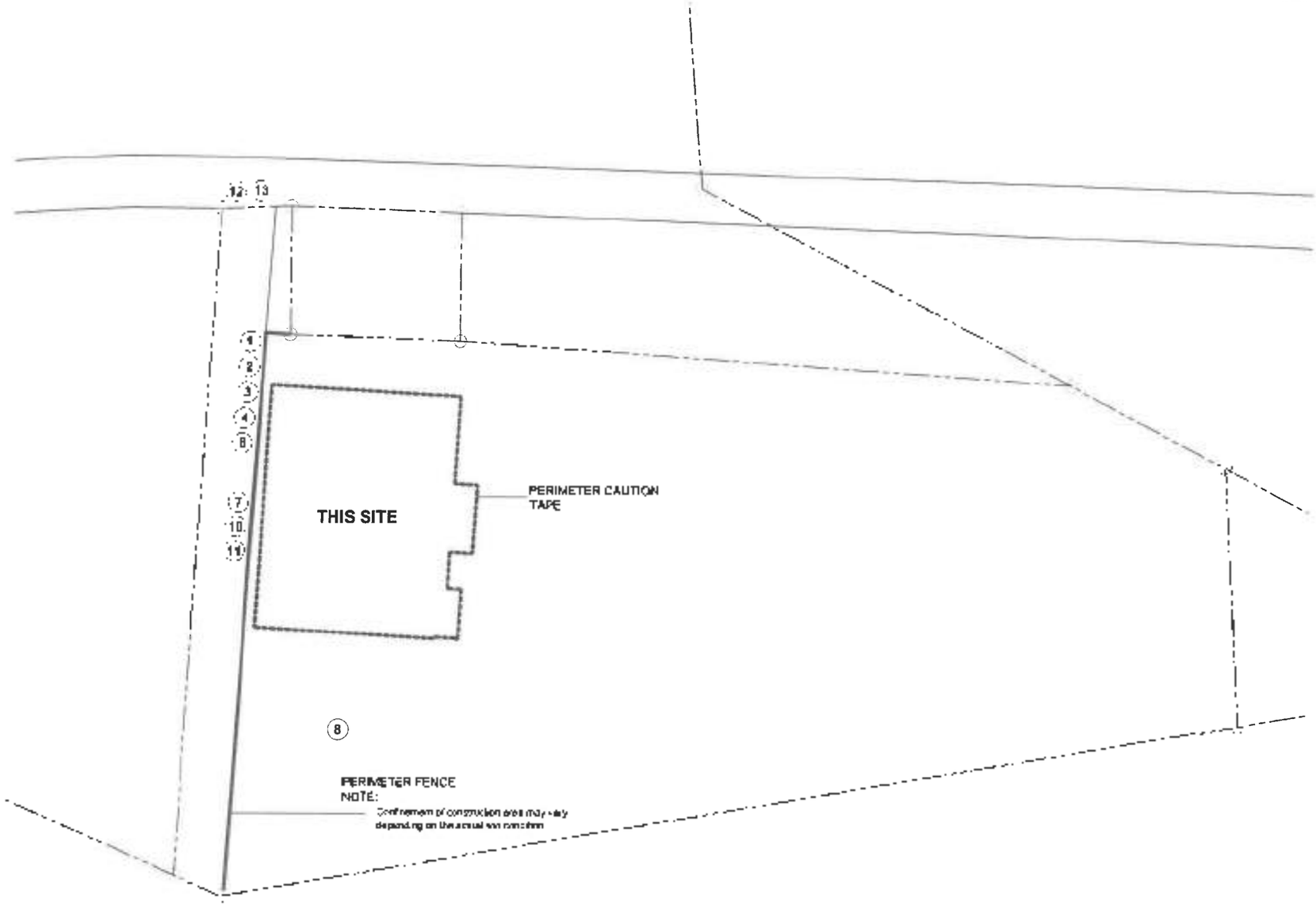

1 / PB-1 **BARRICADE AND SIGNAGES**

SCALE: 1:900MTS

LEGENDS:

Materials: (a) Tarpaulin (b) ¾" Plywood - BlackFrame (c) Misc. materials as wires as hangers, etc

1 — Proper PPE Signage
4' width x 6' height

2 — [illegible]
4' width x 4' height

3 — [illegible]
3' width x 2 height

4 — Safety Harness Required
3' width x 2 height

5 — Welding/Hot Work Area
3' width x 2 height

6 — Authorized Personnel Only
3' width x 2 height

7 — Fall Hazard
3' width x 2 height

8 — Temporary Materials Stacking Area
3' width x 2 height

9 — Hard Hat Area
3' width x 2 height

10 — Danger Deep Excavation
3' width x 2 height

11 — Beware Falling Debris
3' width x 2 height

12 — Construction Entrance
3' width x 2 height

13 — Construction Exit
3' width x 2 height

14 — [illegible]
3' width x 2 height

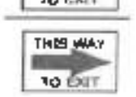

15 — [illegible]
3' width x 2 height

	PROJECT NAME & LOCATION	SHEET CONTENTS:	DESIGNED:	REVIEWED:	SUBMITTED:	RECOMMENDED:	APPROVED:	SET No.	SHEET No.
Republic of the Philippines DEPARTMENT OF PUBLIC WORKS AND HIGHWAYS REGIONAL OFFICE No. VIII NORTHERN SAMAR FIRST DISTRICT ENGINEERING OFFICE Catarman, Northern Samar	CONSTRUCTION OF MULTIPURPOSE FACILITY, (COVERED COURT) BARANGAY SAN JOSE, LAVEZARES, NORTHERN SAMAR Lavezares, Northern Samar	BARRICADE AND SIGNAGES	WILLY [illegible] P. CUEVARDO Engineer II Date	MARIA DEGAMALO R. [illegible] Actg. Chief, Planning Design Section Date	ANDY B. ERENO Chief, Planning & Design Section Date	VIVIAN [illegible] IGNACIO Actg. District Engineer Date	ALVIN A. IGNACIO District Engineer Date	PB-1	41 / 42

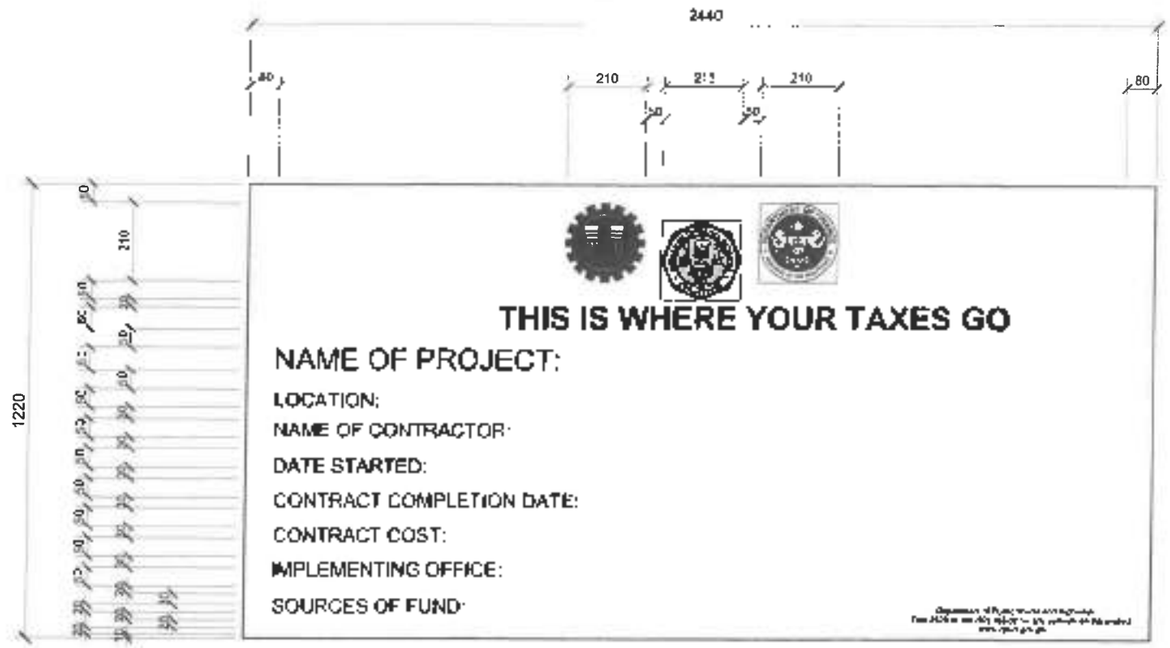

DPWH STANDARD PROJECT BILLBOARD

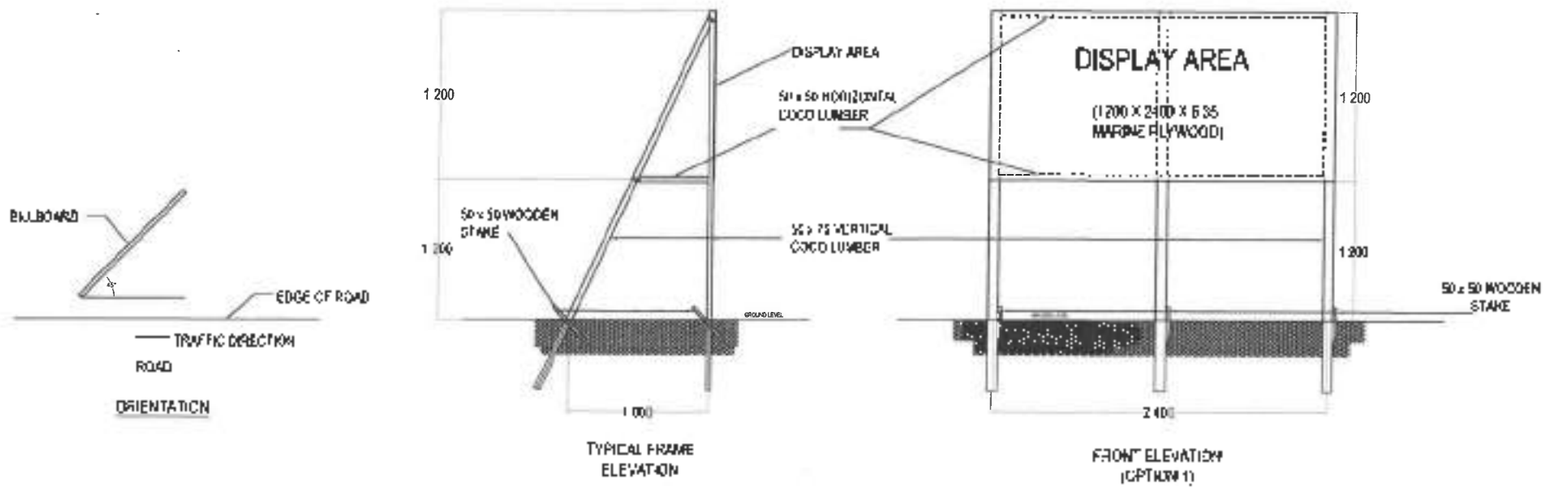

BILLBOARD FRAME

(NOT TO SCALE, ALL DIMENSIONS ARE IN MILLIMETERS)

Republic of the Philippines DEPARTMENT OF PUBLIC WORKS AND HIGHWAYS REGIONAL OFFICE No. VIII NORTHERN SAMAR FIRST DISTRICT ENGINEERING OFFICE Catarman, Northern Samar	PROJECT NAME & LOCATION: CONSTRUCTION OF MULTI-PURPOSE FACILITY (COVERED COURT) BARANGAY SAN JOSE, LAVEZARES, NORTHERN SAMAR 1st Engineering District	SHEET CONTENTS: DPWH STANDARD PROJECT BILLBOARD	DESIGNED: ARCHITECT	REVIEWED: CHIEF, PLANNING & DESIGN SECTION	SUBMITTED: CHIEF, PLANNING & DESIGN SECTION	RECOMMENDED: Chief, Planning & Design Section	APPROVED: ALVIN A. IGNACIO District Engineer	SHEET No. B3-2	SHEET No. 41 42

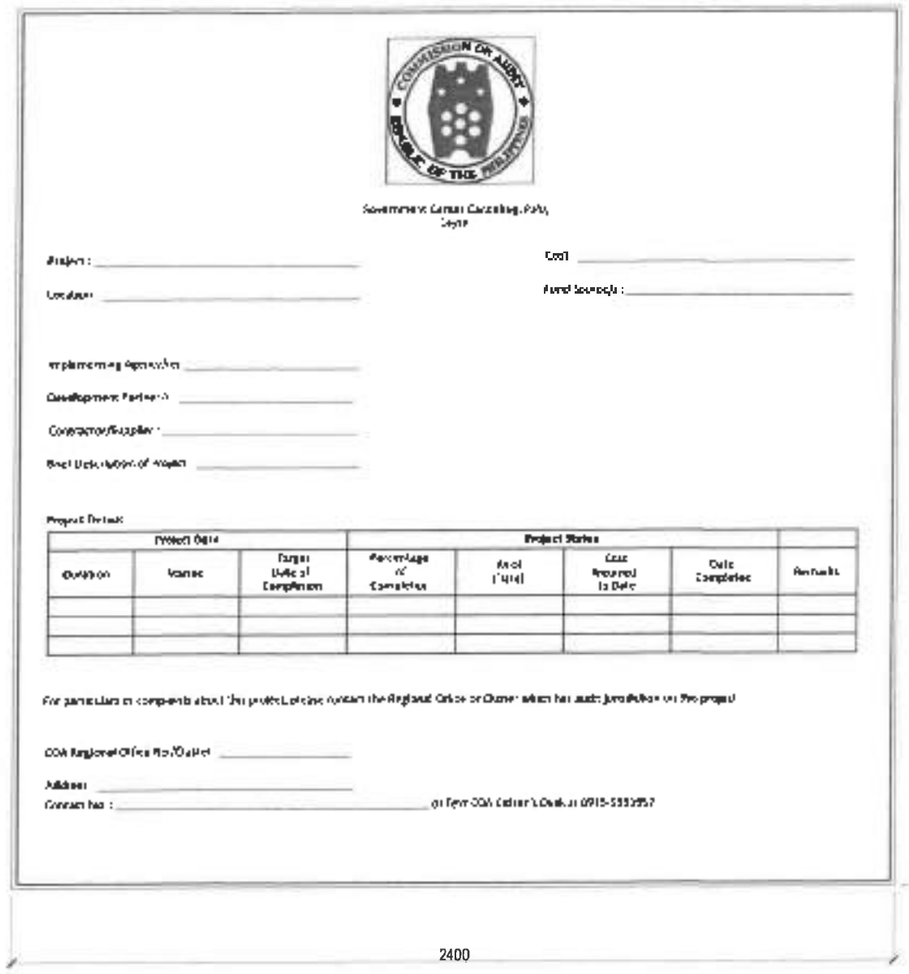

COA STANDARD PROJECT BILLBOARD

SPECIFICATIONS:

1. TARPAULIN, WHITE, 8 FT X 8 FT
2. RESOLUTION : 70 DPI
3. FONT : HELVETICA
4. FONT SIZE : MAIN INFORMATION - 3"
   SUB-INFORMATION - 1"
5. FONT COLOR: BLACK
6. BACKGROUND COLOR: WHITE

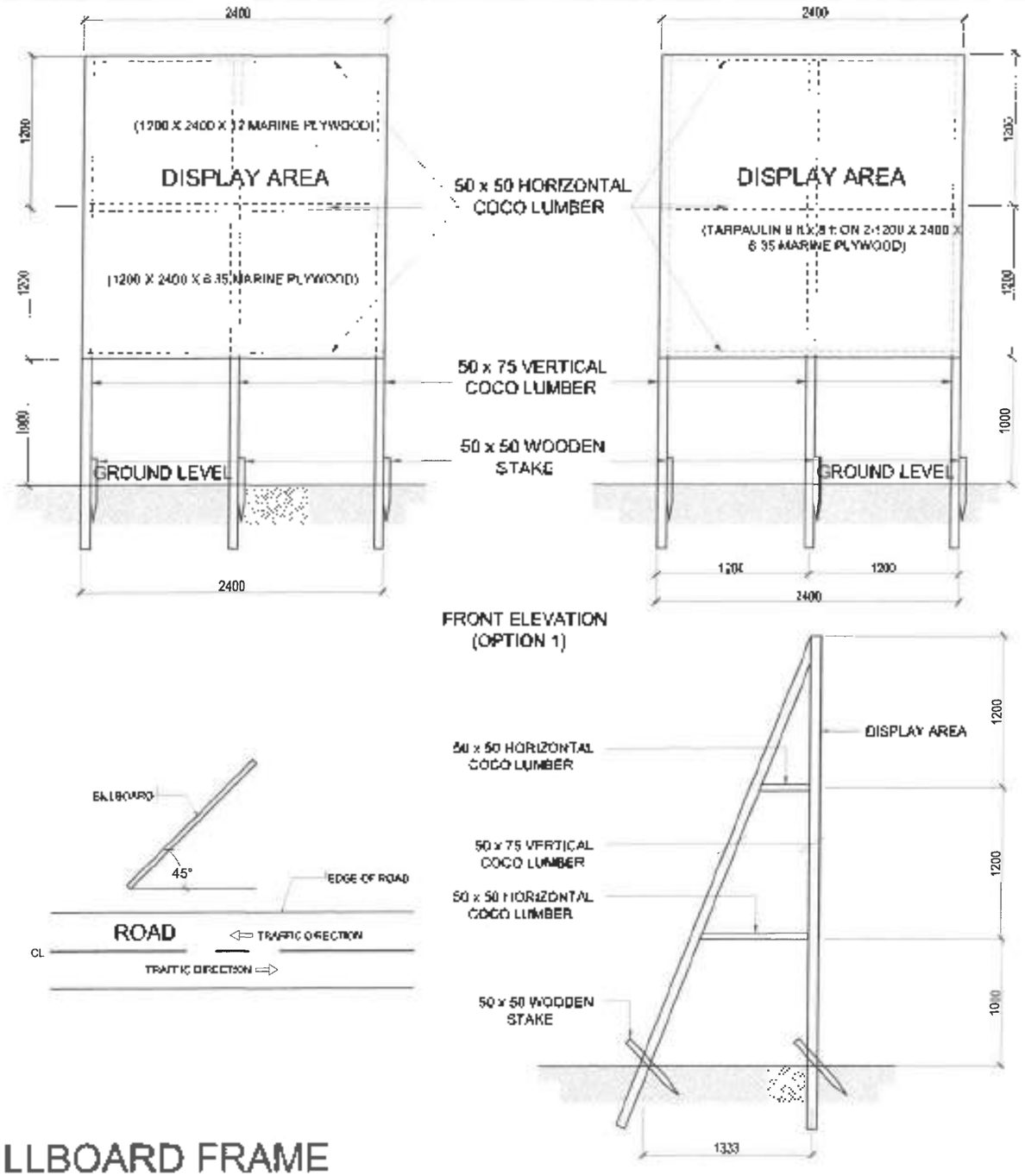

COA BILLBOARD FRAME

(NOT TO SCALE. ALL DIMENSIONS ARE IN METERS)

Republic of the Philippines DEPARTMENT OF PUBLIC WORKS AND HIGHWAYS Regional Office No. VIII NORTHERN SAMAR FIRST DISTRICT ENGINEERING OFFICE Catarman, Northern Samar	PROJECT NAME & LOCATION CONSTRUCTION OF MULTIPURPOSE FACILITY, (COVERED COURT) BARANGAY SAN JOSE, LAVEZARES, NORTHERN SAMAR Lavezares, Northern Samar	SHEET CONTENTS COA STANDARD PROJECT BILLBOARD	DESIGNED: BUENAVENTURA COMBALICEO Architect Date	REVIEWED MARY NICHOLL A. PALMA Civil Engineer Design Section Chief Date	SUBMITTED ANDY S. BRUNO Chief, Planning & Design Section Date	RECOMMENDED VIVIAN CONACO Assistant District Engineer Date	APPROVED: ALVIN A. KONACO District Engineer Date	SET No. PB-3	SHEET No. 42 / 42